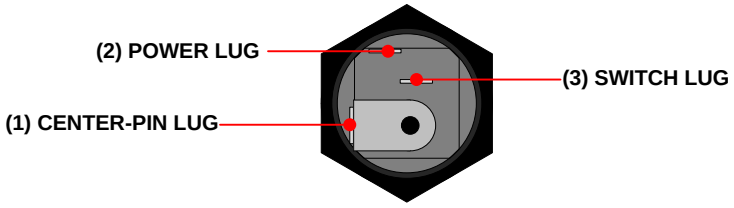

S-H750
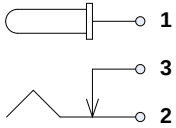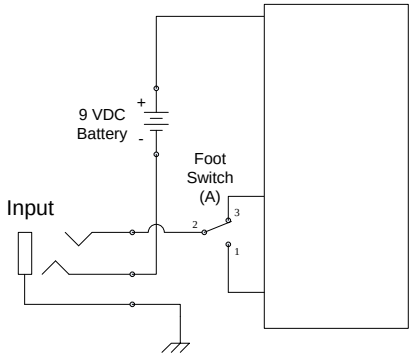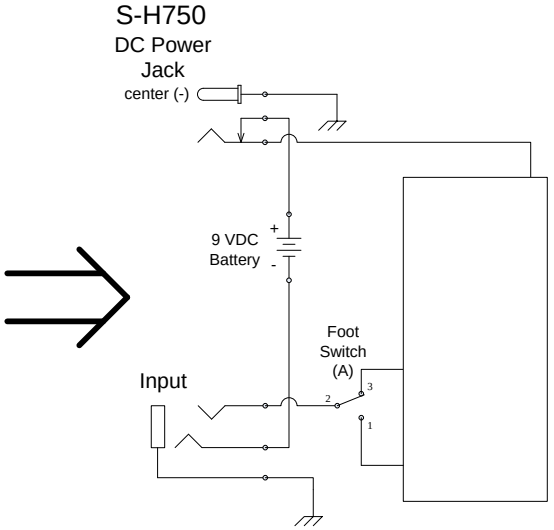
DC Power Jack